Please note: This drawing shows a typical configuration of equipment and does not necessarily show the equipment currently installed in the unit. Verify the specific equipment currently in the unit with a KTG representative.

THE DESIGN AND DETAILS DISCLOSED HEREIN ARE THE EXCLUSIVE PROPERTY OF CARLIN MANUFACTURING L.L.C. AND SHALL NOT BE COPIED OR REPRODUCED IN WHOLE OR IN PART WITHOUT THE PRIOR WRITTEN CONSENT OF CARLIN MANUFACTURING L.L.C. © 2005 CARLIN MANUFACTURING L.L.C.

REVISIONS				
ZONE	REV	DESCRIPTION	DATE	APPROVED

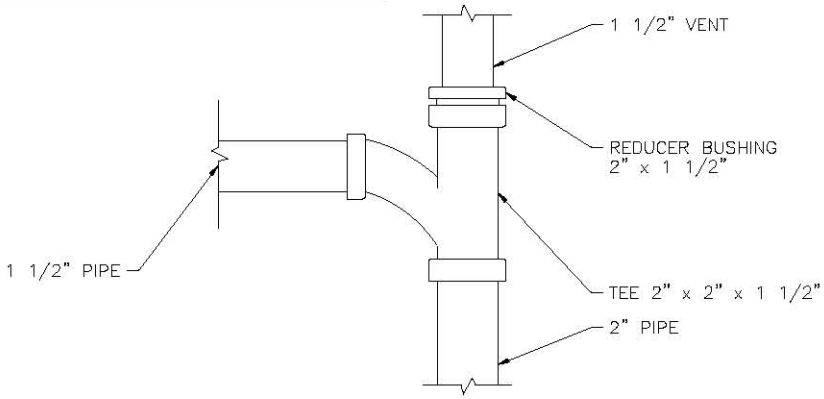

DETAIL A

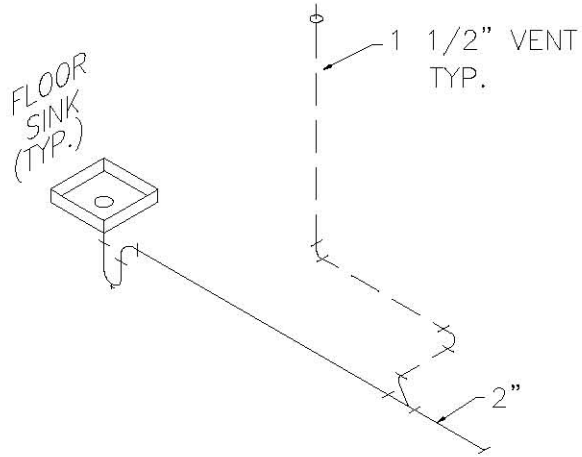

P.O.C (SEE DRAWING# 553-554A04-0-01)

MODULE 1

NOTES AND SPECIFICATIONS:

1. SEWER LINES FROM FLOOR SINKS SHALL ALL BE CAST IRON (C.I.) EXCEPT VENT LINES, OTHERWISE USE ABS MATERIAL.
2. FLOOR SINKS SHALL BE MOUNTED FLUSH WITH THE FINISHED FLOOR.
3. WASTE LINES SHALL BE SUPPORTED WITH PIPE STRAPS TO WITHSTAND ON AND OFF-ROAD CONDITIONS.

SYMBOL	DESCRIPTION
	P-TRAP
	FLOOR SINK
	SINK
	TEE
	TEE/WYE LONG RADIUS
	ELBOW 90°
	VENT LINE
	VENT LINE THROUGH ROOF
	CONDENSATE RECEPTOR
	CLEAN OUT
	REDUCER
	VALVE
	DRIP PAN
	BAYONETTE VALVE
	QUICK DISCONNECT

Kitchens To Go

KTG-553
MODULAR KITCHEN UNIT

SIZE	CAGE CODE	DWG. NO	REV.
B		553P02-0-01	
SCALE 1:1		DRG WT. / ACT. WT.	SHEET

UNLESS OTHERWISE SPECIFIED DIMENSIONS ARE IN INCHES TOLERANCES ARE:
FRACTIONS ± 1/16 DECIMALS .XX ± .03 .XXX ± .005 ANG ± 0°
DO NOT SCALE DRAWINGS
DRAWINGS PREPARED IN ACCORDANCE WITH MIL-F-2100, MIL-STD-100, AND ANSI Y14.5
SIMILAR TO

KTG-553		
	APPROVALS	DATE
DRAWN	GSF	08-24-05
CHECKED		
ENGR.		
DESIGN ACTIVITY		
REV.		

CARLIN MANUFACTURING, L.L.C.

WASTE WATER
PLUMBING SCHEMATIC

SIZE	CAGE CODE	DWG. NO	REV.
B		553P02-0-01	
SCALE 1:1		DRG WT. / ACT. WT.	SHEET